UVMILK IS AN EXPERT IN INDUSTRIAL FILTRATION

UVMILK
STEEL FILTERS

UVMILK steel filters are made from AISI 304 or AISI 316 stainless steel and can purify a wide range of food and petrochemical liquids.

Thanks to their strength, these filters are also suitable for high-viscosity media, ensuring complete purification of the entire product volume.

The filters effectively remove clots, lumps, granules, pigment agglomerates, and foreign particles, thereby creating homogeneous, impurity-free products and raising quality and safety standards.

ADVANTAGES AND BENEFITS OF UVMILK STEEL FILTERS

- Materials approved for use in food and petrochemical plants
- Wide filtration rate range from 2 to 5000 microns
- Leak-proof design and full compliance with installation location
- Manufactured to both standard and unique sizes
- Increased strength and extended service life of filter elements
- High thermal and chemical resistance of filters
- Effective purification of liquids with a wide range of viscosities and fractions.
- Guaranteed safe use in food and industrial environments
- Stable, homogeneous consistency of the finished product
- Extended service life of process equipment
- Compatibility with existing equipment
- No product loss or need for re-filtration.

uvmilk.ru/en export@uvmilk.com **+7 920 226 79 97**

UVMILK IS AN EXPERT IN INDUSTRIAL FILTRATION

The cylindrical cartridge is installed inside the filter housing. The micron rating and hole architecture of the cartridge are tailored to the customer's request and can be custom-manufactured for individual sizes.

The cartridges are made of AISI 304 or AISI 316 stainless steel and are available in four types: mesh, perforated, slotted, and framed. Each type is designed with a specified number and order of frame and filter layers with different hole's shapes and sizes.

from 2 to 5000 microns

MESH FILTERS

Mesh on a perforated cylindrical frame

from 500 microns and more

PERFORATED FILTERS

Radially bent perforated sheet

from 170 microns and more

SLOTTED FILTERS

Thick-walled pipe with laser-cut holes

This innovative technology is patented in Russia (Patent No. RU 2732749)

РОССИЙСКАЯ ФЕДЕРАЦИЯ

ПАТЕНТ

НА ИЗОБРЕТЕНИЕ

№ 2732749

Щелевой фильтр

Патентообладатели: Верхолетов Евгений Иванович (RU), Юшкина Светлана Викторовна (RU)

Авторы: Верхолетов Евгений Иванович (RU), Юшкина Светлана Викторовна (RU)

Заявка № 2020110158

Приоритет изобретения 11 марта 2020 г.

Дата государственной регистрации изобретения в Государственном реестре Российской Федерации 23 сентября 2020 г.

Срок действия исключительного права на изобретение истекает 11 марта 2040 г.

Руководитель Федеральной службы по интеллектуальной собственности

С.Н. Ивлиев

from 2 microns and more

FRAME FILTERS

A layer of filter mesh on a slotted cylindrical frame

uvmilk.ru/en export@uvmilk.com **+7 920 226 79 97**

THE RANGE OF UVMILK STEEL FILTERS

SL

Housing	200 x 175 mm
Slotted filter	123 x 85 mm
Mesh filter	123 x 90 mm
Perforated filter	123 x 90 mm
Frame filter	123 x 85 mm

BB

Housing	394 x 200 mm
Slotted filter	299 x 114 mm
Mesh filter	299 x 123 mm
Perforated filter	299 x 123 mm
Frame filter	299 x 114 mm

ML

Housing	494 x 200 mm
Slotted filter	397 x 89 mm
Mesh filter	397 x 89 mm
Perforated filter	397 x 89 mm
Frame filter	397 x 89 mm

uvmilk.ru/en export@uvmilk.com **+7 920 226 79 97**

UVMILK IS AN EXPERT IN INDUSTRIAL FILTRATION

XL

Housing	570 x 238 mm
Slotted filter	500 x 159 mm
Mesh filter	500 x 168 mm
Perforated filter	500 x 168 mm
Frame filter	500 x 159 mm

XXL

Housing	1100 x 238 mm
Slotted filter	1000 x 159 mm
Mesh filter	1000 x 168 mm
Perforated filter	1000 x 168 mm
Frame filter	1000 x 159 mm

XXXL

Housing	1600 x 238 mm
Slotted filter	1500 x 159 mm
Mesh filter	1500 x 168 mm
Perforated filter	1500 x 168 mm
Frame filter	1500 x 159 mm

uvmilk.ru/en export@uvmilk.com **+7 920 226 79 97**

TECHNICAL SPECIFICATIONS

Filter	Filtration rating, µm	Filter resource, tons	Cartridge size, mm	Filter material	Method of production
Pour-Through Filter SL Pour-Through Filter BB Pour-Through Filter XL	from 2	up to 15 up to 50 up to 100	250 x 190 x 115 480 x 480 x 500 750 x 750 x 500	AISI 304, AISI 316	metalworking
Perforated filter SL Perforated filter BB Perforated filter XL Perforated filter XXL Perforated filter XXXL	from 500	up to 15 up to 50 up to 100 up to 200 up to 500	123 x 90 x 82 299 x 123 x 110 500 x 168 x 150 1000 x 168 x 150 1500 x 168 x 150		
Mesh filter SL Mesh filter BB Mesh filter XL Mesh filter XXL Mesh filter XXXL	from 2	up to 15 up to 50 up to 100 up to 200 up to 500	123 x 90 x 82 299 x 123 x 110 500 x 168 x 150 1000 x 168 x 150 1500 x 168 x 150		
Slotted filter SL Slotted filter BB Slotted filter XL Slotted filter XXL Slotted filter XXXL	from 170	up to 15 up to 15 up to 50 up to 200 up to 500	123 x 85 x 81 299 x 115 x 110 500 x 159 x 153 1000 x 159 x 153 1500 x 159 x 153		
Frame filter SL Frame filter BB Frame filter XL Frame filter XXL Frame filter XXXL	from 2	up to 50 up to 100 up to 100 up to 200 up to 500	230 x 85 x 81 299 x 114 x 111 500 x 159 x 153 1000 x 159 x 153 1500 x 159 x 153		

METALWORKING MANUFACTURING

Steel filters are produced in the metalworking shop.
The metalworking shop is equipped with modern machinery. CNC turning and milling machines produce filters and housings from AISI 304, 316, and 321 stainless steel. Laser systems perform high-precision cutting and perforation of filter elements. To ensure reliability, all components are joined using argon arc welding with fully ground seams.

A constantly growing and updated machine park, a wide micron rating and a range of materials used guarantee that the finished filter equipment fully meets the expectations and needs of our customers.

production area **1200** m²

machine park **26** machines

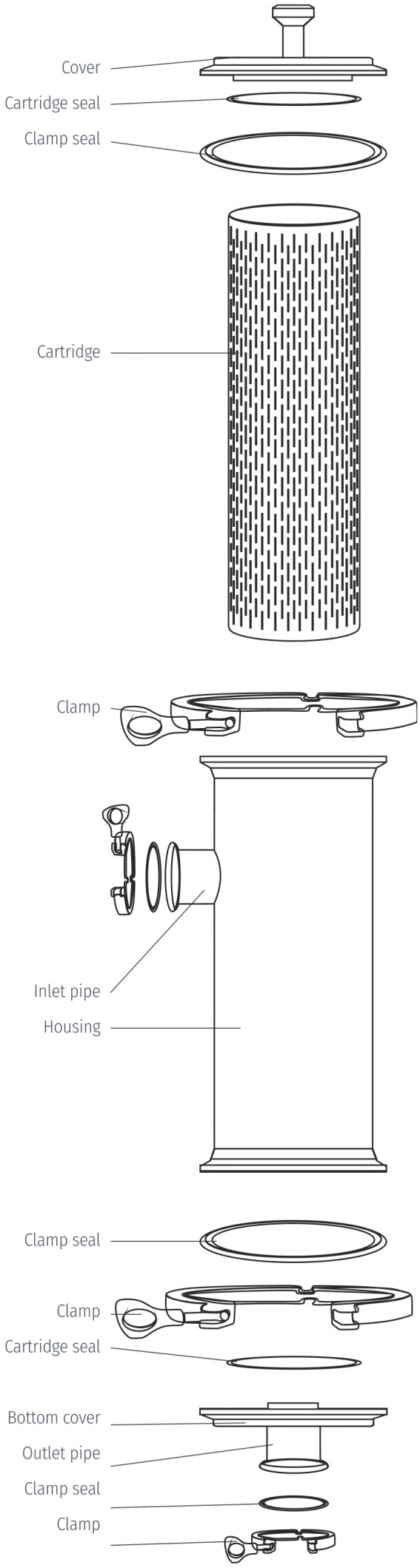

OPERATING PRINCIPLE

The filtered liquid is fed into the filter housing through the inlet pipe, forced under pressure through the cartridge, and exits through the outlet pipe in the lower cover of the housing. Contaminants and impurities remain on the cartridge walls.

FILTER ASSEMBLY

1. Connect the housing and bottom cover with a clamp, inserting a silicone seal.
2. Place a flat seal on the bottom of the housing and install the filter element.
3. Place the silicone seal precisely in the groove along the top edge of the housing.
4. Place the flat seal over the filter element seat on the cover.
5. Close the filter cover tightly and secure the assembly with a clamp.
6. Use the mating parts to connect the housing to the filtration line.

uvmilk.ru/en export@uvmilk.com **+7 920 226 79 97**

ABOUT US

Welcome to UVMILK Company, located in Voronezh, Russia, where we specialize in cutting-edge filtration equipment.

Since our inception in 2004, we have pioneered milk filtration technology, earning our first patent for this groundbreaking invention. With over 20 years of experience, we manufacture filtration solutions that cater to every stage of production — from raw materials and ingredients to finished products, as well as water, air, and fuel filtration. Our commitment to innovation is demonstrated by our extensive portfolio of 18 Russian patents for inventions and utility models, along with additional patents in China and New Zealand.

At UVMILK, we prioritize understanding our customers' needs and the unique characteristics of their production processes when developing new technologies.

We base our innovations on thorough scientific research, cutting-edge engineering advancements, and expert management insights. All new products undergo rigorous testing, both at our dedicated test bench and within our customers' production facilities. Innovations that demonstrate their effectiveness are adopted as best practices and seamlessly integrated into the technological workflows of agricultural, processing, and industrial enterprises.

UVMILK is a full-cycle enterprise specializing in extrusion, metalworking, thermal bonding, and silicone product manufacturing.

Our commitment to continuous development is supported by a robust in-house RD department, state-of-the-art equipment, and a team of qualified specialists. We drive innovation through research and development (RD), equipment enhancement, and comprehensive personnel training.

Today, UVMILK stands as the largest Russian manufacturer of filtration units for food, agricultural, and industrial enterprises. Our contributions are recognized and valued by the professional community. One of our core values is the trust of our partners, and we conduct all our activities in alignment with this principle.

uvmilk.ru/en
export@uvmilk.com
+7 920 226 79 97

394070, Russia,
Voronezh, Teplichnaya St., 26/8